TEKNO RC Setup Sheet EB410.2

Name: Michael Wrzaczek **Date:** 10. Jan. 2021 **Event:**

Track: INDOOR ○ OUTDOOR ● **Size:** SMALL ○ MEDIUM ● LARGE ○ **Traction:** LOW ○ MEDIUM ○ HIGH ●

Surface: SMOOTH ● BUMPY ○ RUTTED ○ **Type:** LOOSE / LOAMY ○ HARD PACKED ○ BLUE GROOVE ○ CLAY ○ ASTRO ●

Condition: DUSTY ○ DRY ● WET ○ MUDDY ○

Bumpsteer/Ackerman/Steering Stop:

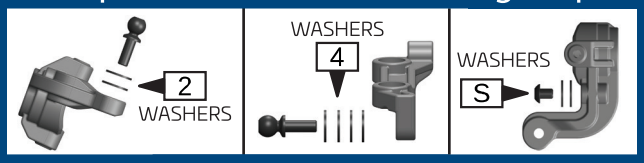

Front End:

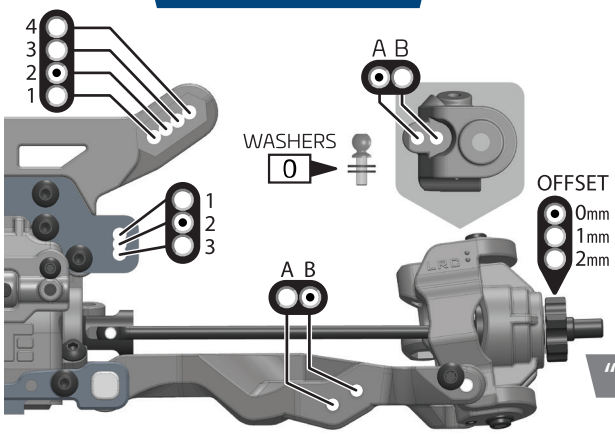

Suspension:

RIDE HEIGHT: 17	CAMBER: -2
CASTER: 15	SWEEP: 0
KICK UP: 10	TOE: 0.5 out
SWAY BAR: 1.5	DROOP: 78

Shocks:

OIL: 600	BRAND: Hudy
PISTON: 8 x 1.2	SPRING: Red
REBOUND: 0	BUILD: Emu
STROKE: 23	

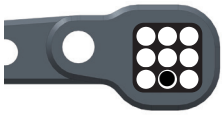

"A" Block:

(Arm Sweep)
(0° with center dot inserts)

"B" Block:

(Kick-Up)
(10° with center dot inserts)

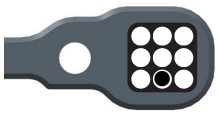

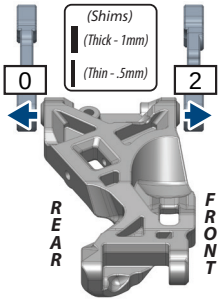

Rear End:

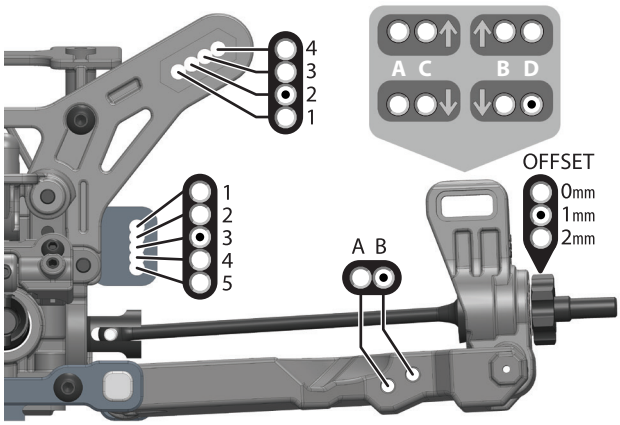

Suspension:

RIDE HEIGHT: 18	CAMBER: -2
ANTI-SQUAT: 2	TOE: 1.5 in
SWAY BAR: 1.7	DROOP: 89

Shocks:

OIL: 600	BRAND: Hudy
PISTON: 8 x 1.3	SPRING: Orange
REBOUND: 0	BUILD: Emu
STROKE: 29	

"C" Block:

(Anti-Squat)
(2° with center dot inserts)

"D" Block:

(Rear Toe)
(2° with center dot inserts)

Rear Hub / Wheelbase:

(Roll Center)

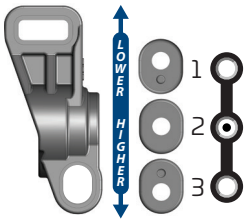

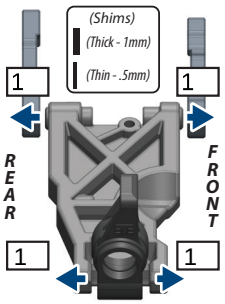

Wing:

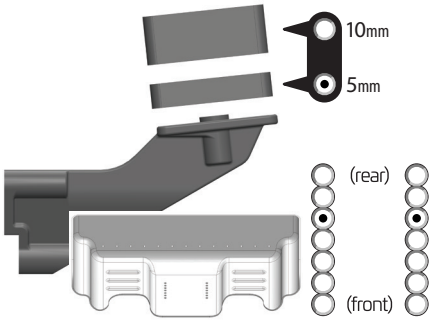

Differential Oil:

FRONT	CENTER	REAR
15K	300K	10K

Drivetrain:

PINION / SPUR: 20 / 81 (teeth)

Equipment:

MOTOR: Reedy Sonic 7.5T

ESC: HW XR10Pro G2

BATTERY: Intellect LiHV 6000 mAh

RADIO: Sanwa MT-44

SERVO: SRT BH8015 Low Prof

Chassis Braces:

REAR-SHORT: ● REAR-LONG: ●

Tires / Wheels:

BRAND / TREAD: F Wide Stagger/R Minidarts

COMPOUND: Yellow

INSERT: Medium

WHEEL: DE Racing

NOTES:

Body / Wing:

BODY MAKE: Tekno

WING MAKE: Proline Trifecta

Notes:

CF center/top plates

CF towers (.1 version)

2 mm rear diff shim

Exotek rear diff mount

Alu shock caps

Alu ackermann plate